ANCA motion

Motion Control Solutions

AMI5000 EtherCAT Remote Pendant User Manual

AMDOC-000772 Rev 17

WE
LOVE
MOTION

Page intentionally left blank

AMI5000 EtherCAT Remote Pendant User Manual

Some Important Links

ANCA Motion web site	*ANCA Motion*
EtherCAT Remote Pendant web page	*Remote Pendant*
Customer Support web page	*Customer Support*
Sales and Support Contact Information	*Product, Sales and Service Enquiries*

Document Reference: AMDOC-000772 Rev 17

Effective: 10 September 2025

© ANCA Motion Pty. Ltd.

Page intentionally left blank

Contents

1 Notices 1
1.1 General Safety 1
1.2 Terms and Abbreviations 2
1.3 Trademarks 2
2 Introduction 3
2.1 Purpose 3
2.2 Features 3
2.3 Remote Pendant Product Label Explanation 3
2.4 Product Order Code 4
3 Remote Pendant 5
3.1 Overview 5
3.2 Pendant (Standard and Lite) Versions 6
3.3 Remote Pendant Dimension Drawings 7
3.3.1 Pendant Standard 7
3.3.2 Pendant Lite 7
3.3.3 Pendant Standard (with cradle) 8
3.3.4 Pendant Lite (with cradle) 8
4 Remote Pendant Patch Board 9
4.1 Overview 9
4.2 Patch Board Mk1 9
4.2.1 Patch Board Mk1 Dimensions 9
4.3 Patch Board Mk2 10
4.3.1 Patch Board Mk2 Dimensions 10
4.3.2 Patch Board Mk2 Enclosure Dimensions 10
5 Remote Pendant Cradle 11
5.1 Overview 11
5.2 Pendant Cradle Mechanical Drawing 12
5.2.1 Pendant Cradle Mounting Hole Pattern 12
6 Mechanical Installation 13
6.1 Mounting the Remote Pendant 13
6.2 Mounting the Pendant Cradle 13
6.3 Mounting the Patch Board 14
6.3.1 Patch Board Mk1 and Mk2 Cut-out Pattern 14
6.3.2 Patch Board Mk2 Enclosure 14
6.4 Mounting the Spiral Cable Clamp 15
7 Electrical Installation 16
7.1 Introduction 16
7.2 Connector Overview 16
7.2.1 Remote Pendant Patch Board Mk1 16
7.2.2 Remote Pendant Patch Board Mk2 17

7.3 Connector Descriptions 18
7.3.1 X1 - Pendant Circular Connector 18
7.3.2 X2 - Power Supply and Safety Interface Connector 18
7.3.3 X3 – EtherCAT Connector 19
7.3.4 EtherCAT Cable 19
7.4 Wiring Diagram 20

8 Communication 21
8.1 EtherCAT® 21
8.2 Third Party EtherCAT Masters 21
8.3 ESI File 21

9 Safety Devices 22
9.1 Safety Devices on the Pendant 22
9.2 Safety Standards and Risk Assessment 22
9.3 Safety Actuator Data 22
9.4 Emergency Stop Application Information 22
9.5 Hold-to-Run Application Information 23

10 Installation Checklist 24
10.1 Introduction 24
10.2 Checklist 24

11 EtherCAT Configuration 25
11.1 Introduction 25
11.2 Frame Packet Mapping 25
11.2.1 Inputs 25
11.2.2 Boolean Inputs 26
11.2.3 Integer Inputs 26
11.2.4 Outputs 27
11.2.5 Boolean Outputs 27

12 Commissioning and Testing 28
12.1 Introduction 28
12.2 Testing / Power-On Checks 28
12.3 EtherCAT Fault Diagnostics 28
12.3.1 Remote Pendant Status Indicators 28
12.3.2 EtherCAT RUN Indicator 29
12.3.3 EtherCAT ERROR Indicator 29
12.3.4 EtherCAT RUN and ERROR Indicator Blink Rates 29
12.3.5 Patch Board LED Indicators 29

13 Standards and Conformity 30
13.1 CE and FCC Conformity 30
13.2 FCC Notices 30
13.3 EtherCAT® Conformance Marking 30
13.4 Limitations for Use 30

14 Specifications 31

14.1 Control Functions 31
14.1.1 User Interface 31
14.1.2 Feedrate Potentiometer 31
14.1.3 MPG 31
14.1.4 Buzzer (Optional) 31
14.2 Safety Actuators 31
14.2.1 Emergency Stop 31
14.2.2 Hold-to-Run (Optional) 31
14.3 Environmental Specifications 32
14.3.1 Storage 32
14.3.2 Operation 32
14.4 EtherCAT Interface 32
14.5 Electrical Specifications 32
14.5.1 Power Supply 32
14.5.2 Power Supply Protection 32
14.6 Mechanical Specifications 33
14.6.1 Physical Characteristics 33
14.6.2 Pendant Standard Dimensions 33
14.6.3 Pendant Lite Dimensions 33
14.6.4 Cable Characteristics 33
14.6.5 Patch Board Connectors 33

15 Accessories 34
15.1 Introduction 34
15.2 Pendant Cradle 34
15.3 Pendant Patch Board Mk1 34
15.4 Pendant Patch Board Mk2 35
15.5 Pendant Patch Board Mk2 Enclosure 35
15.6 Patch Board Terminal Block 36
15.7 EtherCAT Cables 36
15.8 Pendant Spiral Cable Clamp 37
15.9 Accessory Kits 37

16 Additional Information 38
16.1 Maintenance and Repairs 38
16.2 Product, Sales and Service Enquiries 38
16.3 Feedback 38

1 Notices

1.1 General Safety

Warning: The Remote Pendant contains three permanent magnets in the back of the case to hold the pendant into the mounting cradle. People with pacemakers or similar medical implant devices should not hold the pendant closer than 50mm (2 inches) from the medical device.

This manual and the warnings attached to the Remote Pendant only highlight hazards that can be predicted by ANCA Motion. Be aware they do not cover all possible hazards.

ANCA Motion shall not be responsible for any accidents caused by the misuse or abuse of the device by the operator.

Safe operation of these devices is your own responsibility. By taking note of the safety precautions and warnings in this manual you can help to ensure your own safety and the safety of those around you.

The following points must always be applied:

- Equipment operators must read this User Manual carefully and make sure of the correct procedure before operating the Remote Pendant.
- If two or more persons are working together, establish signals so that they can communicate to confirm safety before proceeding to another step.
- Always make sure there are no obstacles or people near the devices during installation and operation. Be aware of your environment and what is around you.
- Take precautions to ensure that your clothing, hair, or personal effects (such as jewellery) cannot become entangled in the equipment.
- Do not remove the cover to access the inside of the Remote Pendant unless authorized
- Do not turn on any of the equipment without all safety features in place and known to be functioning correctly.
- Never touch any exposed wiring, connections, or fittings while the equipment is in operation.
- Do not apply any excessive mechanical force to the pendant which may cause malfunction or failure.
- Keep the vicinity of the Remote Pendant clean and tidy.
- Never attempt cleaning or inspection during machine operation.
- Only suitably qualified personnel should install, operate, repair and/or replace this equipment.
- Be aware of the closest First Aid station.
- Ensure all external wiring is clearly labelled. This will assist you and your colleagues in identifying possible electrical safety hazards.
- Clean or inspect the equipment only after isolating all power sources.
- Install cables according to local legislation and regulations as applicable.

1.2 Terms and Abbreviations

B10d	The number of operating cycles after which 10% of a population of a component will have failed dangerously
Cat 5e	Category 5e twisted-pair cable for computer networks up to one gigabit (1,000 Mbit per second)
CE	Conformity European
EMC	Electromagnetic Compatibility
ESI	EtherCAT Slave Information
EtherCAT	Ethernet for Control Automation Technology
FCC	Federal Communications Commission
HMI	Human Machine Interface
HTR	Hold-to-Run
IEC	International Electrotechnical Commission
IPB	Input Physical Boolean
IPI	Input Physical Integer
LED	Light Emitting Diode
MPG	Manual Pulse Generator
MTTFd	Mean Time To Dangerous Failure
N/A	Not Applicable
N/C	Pin is not connected
OPB	Output Physical Boolean
Pot	Potentiometer
Temp	Temperature

Table 1-1 Terms and Abbreviations

1.3 Trademarks

EtherCAT® is a registered trademark and patented technology, licensed by Beckhoff Automation GmbH, Germany.

2 Introduction

2.1 Purpose

This manual provides the required information for installing, commissioning, and operating the AMI5000 Remote Pendant. It has been written specifically to meet the needs of qualified Engineers and Machine Operators.

2.2 Features

The Remote Pendant has the following features:

- Compact and ergonomic design
- 16 tactile switches with LED indicators
- Manual Pulse Generator (MPG)
- Feedrate Control Dial
- Dual channel Emergency Stop Switch
- EtherCAT® connectivity
- Firmware Upgradeable
- Dual channel Hold-to-Run switch. (Pendant Standard only)
- Warning Buzzer (Pendant Standard only)

2.3 Remote Pendant Product Label Explanation

The Remote Pendant has a laser-marked identification label on the rear of the case as shown in *Figure 2-1.*

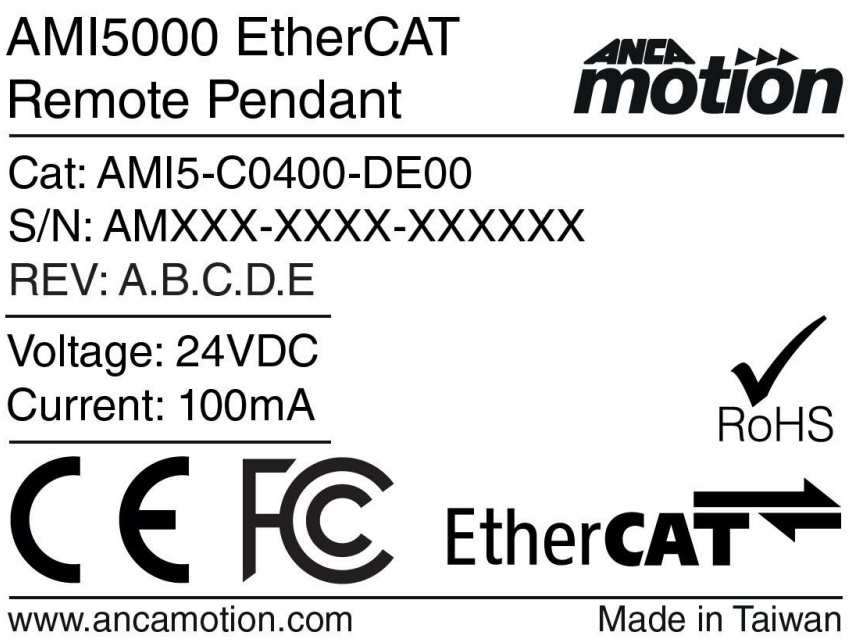

Figure 2-1 Remote Pendant Product Label

For any warranty work to be undertaken this label must be readable and undamaged.

2.4 Product Order Code

The Remote Pendant Product Code is shown in *Figure 2-2*.

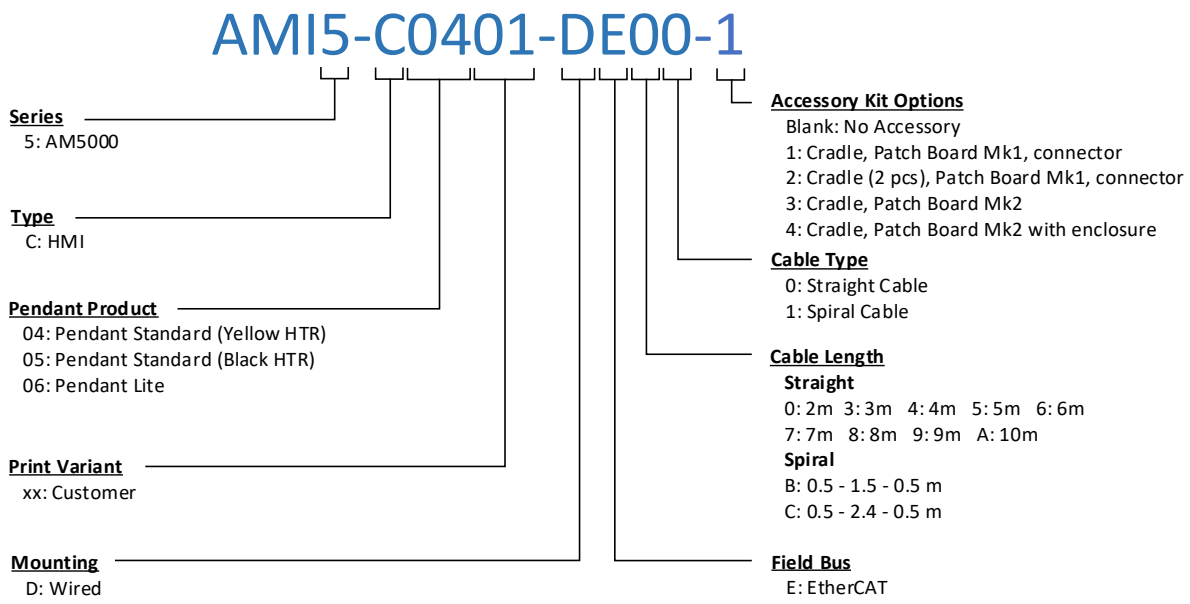

Figure 2-2 Remote Pendant Product Code

The order code suffix shows optional accessory kits that can be ordered with the Remote Pendant. Leave this field blank if a kit is not required.

3 Remote Pendant

3.1 Overview

The Remote Pendant Standard features are shown in *Figure 3-1*. Note, the Pendant Lite does not include the Hold-to-Run switch[1].

The polyester printing can be customised to meet the end user branding. Contact Sales for a Custom Artwork Order Form (see section *16.2*). For example:

- Custom text or graphic symbols or other languages on tactile switches
- Custom colour choice for polyester graphics and text
- Customer colour logo

Additionally, other Pendant customisations are available on *special request* such as:

- Reduced number of front panel tactile switches
- No E-Stop
- No Feedrate dial
- No MPG

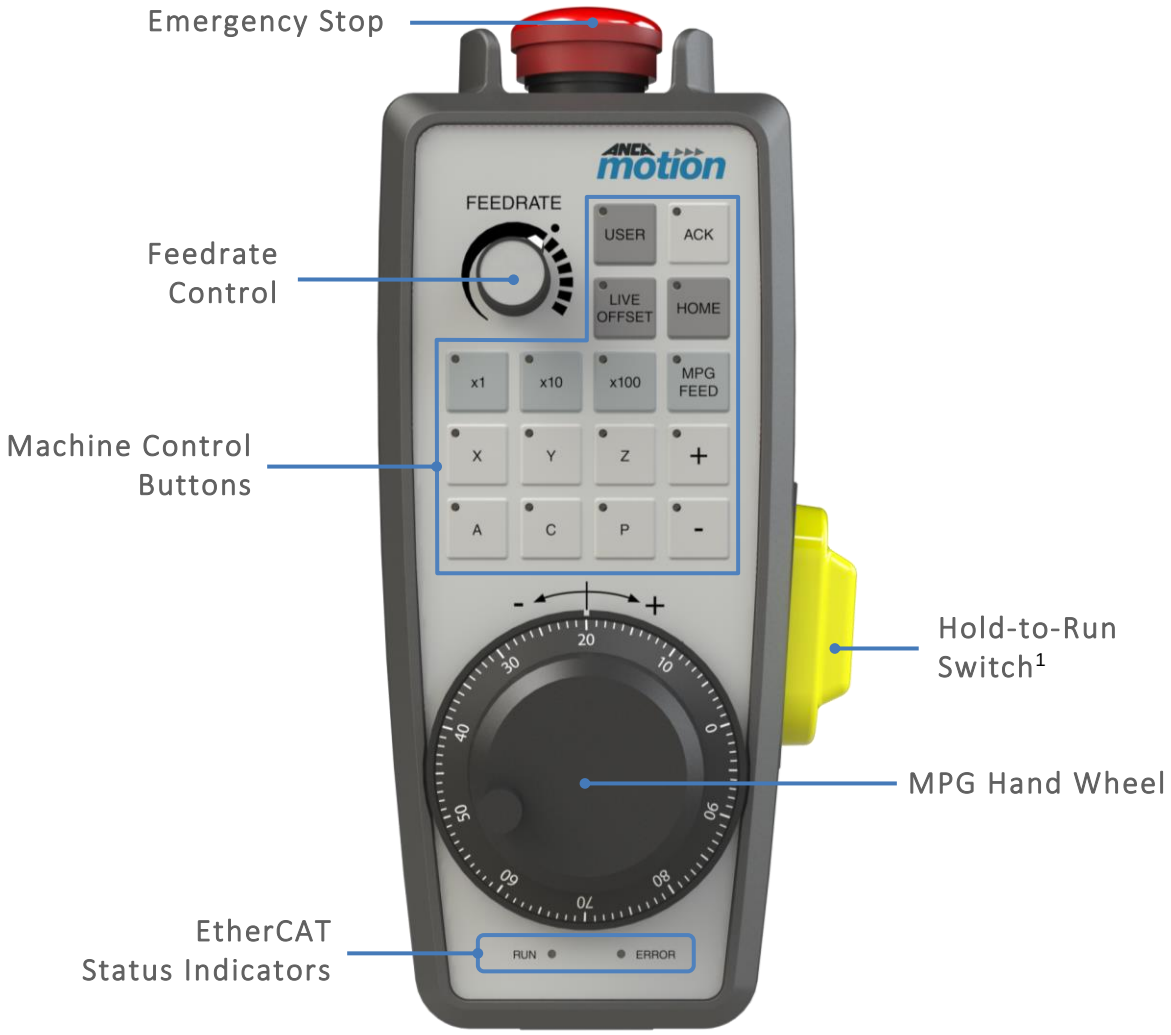

Figure 3-1 Overview Image of Remote Pendant

[1] Pendant Standard only. Refer to *Figure 2-2* for the HTR switch colour options.

3.2 Pendant (Standard and Lite) Versions

The Remote Pendant is a Human Machine Interface (HMI) which uses EtherCAT® to communicate to the control system allowing fast and flexible access for real-time control. It available in Standard or Lite configurations. The Standard version has all the Pendant features and functions. The Lite version does not include the Hold-to-Run switch and Warning Buzzer.

Figure 3-2 shows the Hold-to-Run Switch on the “Standard” Pendant model and omitted on the “Lite” Pendant.

Figure 3-2 Remote Pendant Standard (left) and Remote Pendant Lite (right)

3.3 Remote Pendant Dimension Drawings

3.3.1 Pendant Standard

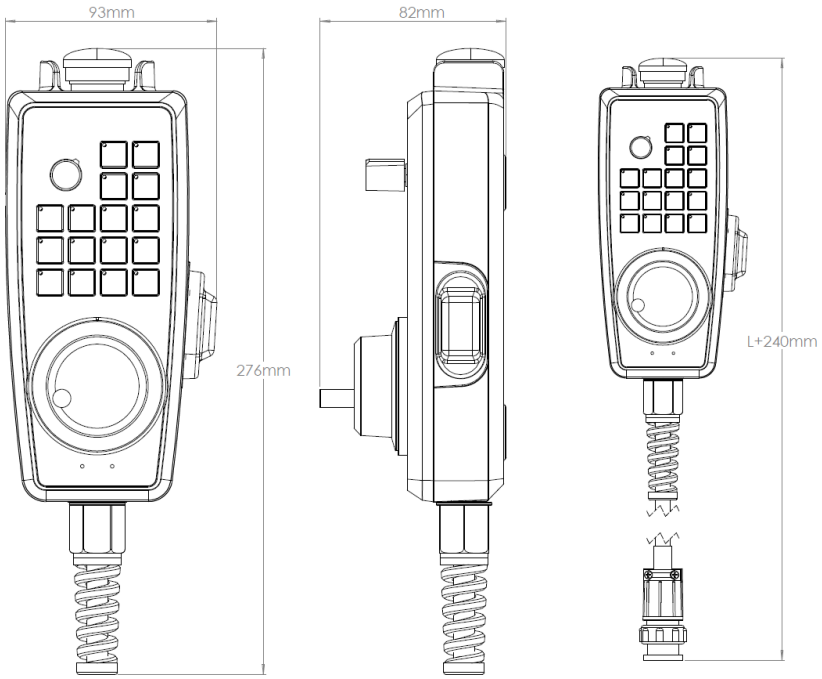

Figure 3-3 Remote Pendant Standard Dimensions (mm)

3.3.2 Pendant Lite

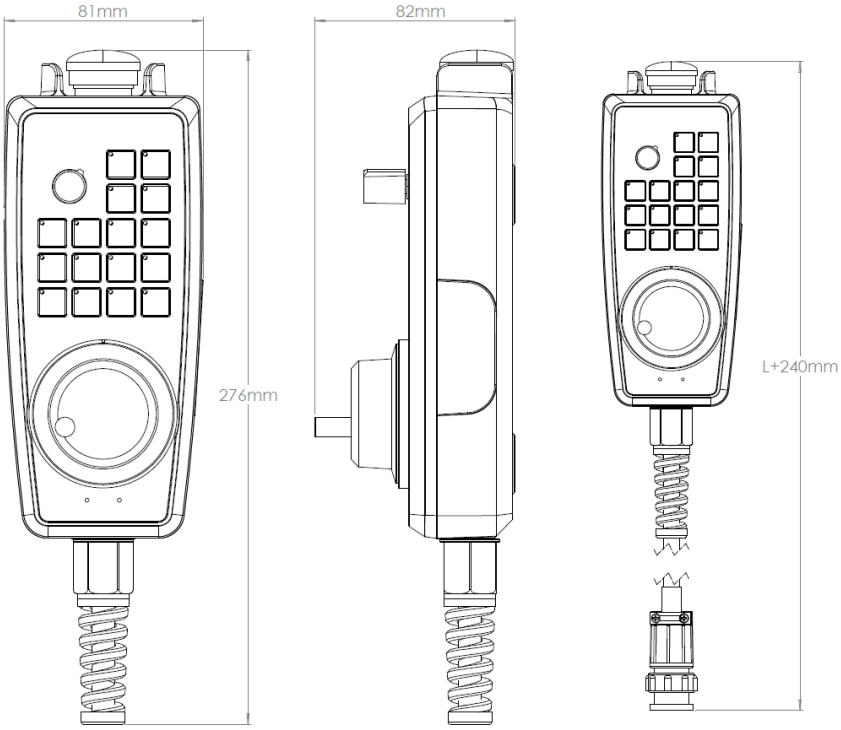

Figure 3-4 Remote Pendant Lite Dimensions (mm)

3.3.3 Pendant Standard (with cradle)

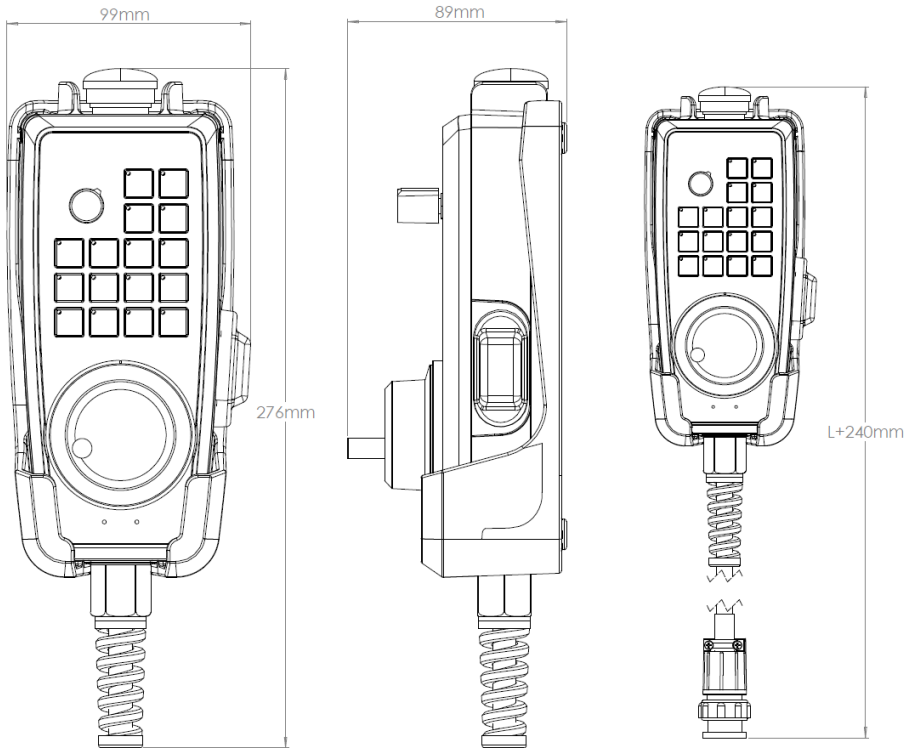

Figure 3-5 Remote Pendant Standard with Cradle Dimensions (mm)

3.3.4 Pendant Lite (with cradle)

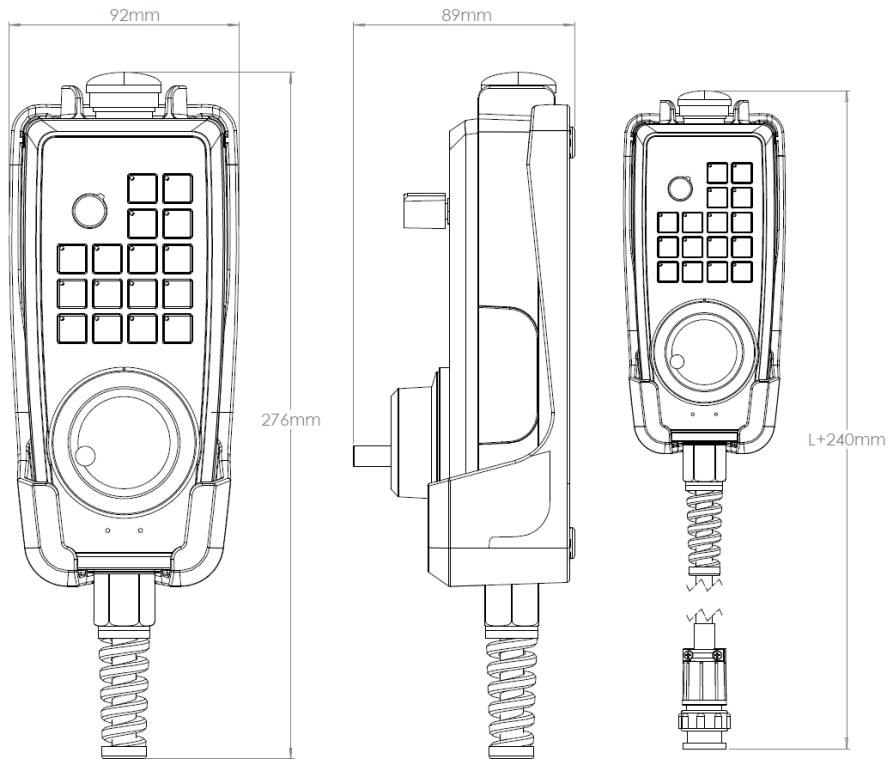

Figure 3-6 Remote Pendant Lite with Cradle Dimensions (mm)

4 Remote Pendant Patch Board

4.1 Overview

The Pendant interfaces with the Host System through the Pendant Patch Board. The Pendant connects to an 18-pin circular connector, X1. The Patch Board provides connectivity to customer 24Vdc power and safety actuators via X2. EtherCAT communications is via X3.

The Patch Board is available with two system wiring options, Mk1 and Mk2. Both Patch Board models are available in a panel-mount version, and Mk2 can also be supplied in a DIN rail mounted enclosure.

The difference between Mk1 and Mk2 is the system wiring for the Safe Actuators (Emergency Stop and Hold-to-Run) as shown in *Figure 7-6* and *Figure 7-7* respectively.

4.2 Patch Board Mk1

Patch Board Mk1 is shown in *Figure 4-1*. It is an open PCBA for panel mounting inside a sealed electrical enclosure. Mk1 is designed for use with a safety PLC using test pulses for diagnostic coverage of the safe actuators. Refer to section *6.3* for mechanical installation and Chapter *7* for electrical installation.

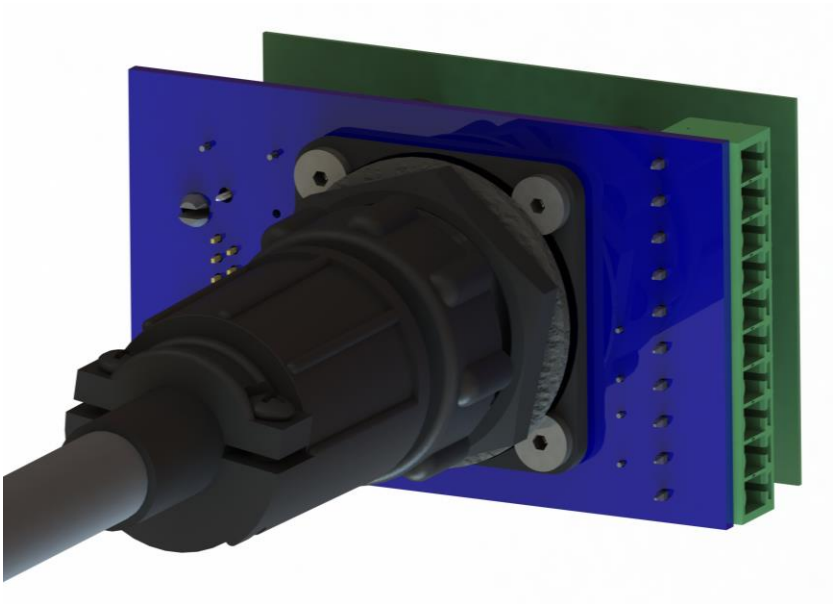

Figure 4-1 Patch Board Mk1 with Wiring Plug

4.2.1 Patch Board Mk1 Dimensions

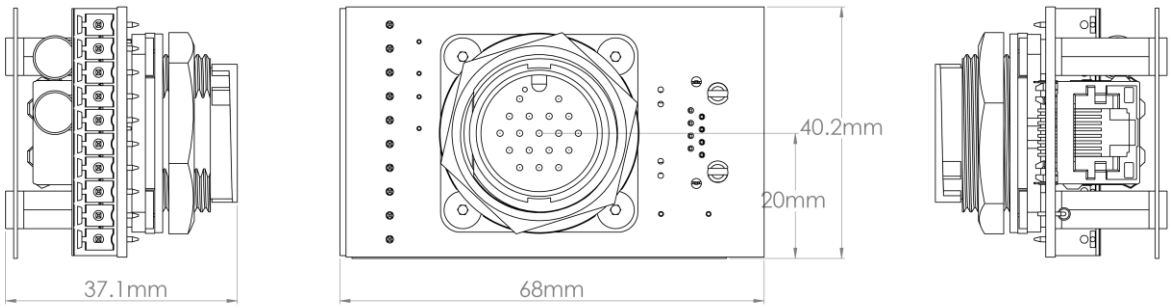

Figure 4-2 Patch Board Mk1 Dimensions (mm)

4.3 Patch Board Mk2

The Patch Board Mk2 is shown in *Figure 4-3*. It is designed for use with a safety PLC which requires individual connections to all terminals of the safe actuators. The Patch Board Mk2 can be ordered in two versions:

1. An open PCBA for panel mounting inside a sealed electrical enclosure, or
2. A DIN-rail mount enclosure

Figure 4-3 Pendant Patch Board Mk2 and Mk2 Enclosure

Refer to section *6.3* for mechanical installation and Chapter *7* for electrical installation.

4.3.1 Patch Board Mk2 Dimensions

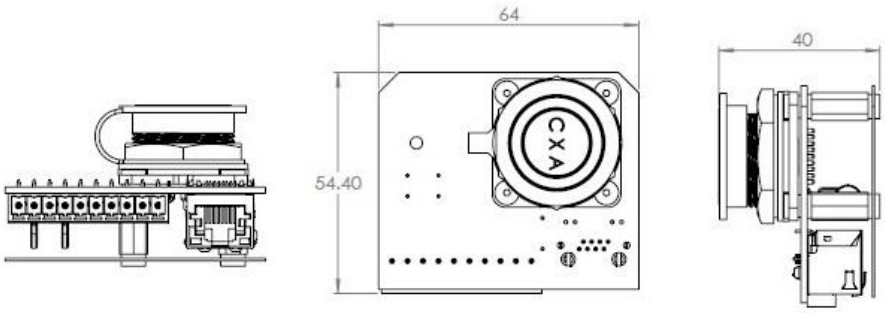

Figure 4-4 Patch Board Mk2 Dimensions (mm)

4.3.2 Patch Board Mk2 Enclosure Dimensions

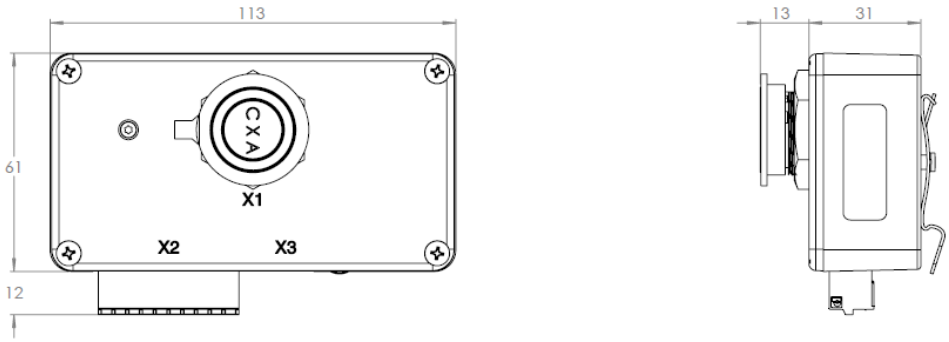

Figure 4-5 Patch Board Mk2 Enclosure Dimensions (mm)

5 Remote Pendant Cradle

5.1 Overview

The Pendant is intended to be mounted in the Pendant cradle when not in use to minimises the risk of accidental damage caused by dropping or kicking the Pendant cable to dislodge it when it is left outside of the cradle.

The cradle provides a feature to securely hold the base of the Pendant so that it cannot slide out but still allow for easy removal when required. Simply lift the Pendant slightly so it is clear of the bottom retaining feature.

The cradle has been designed for simple mounting to any flat surface by the three screws provided with the kit.

Figure 5-1 Remote Pendant Cradle

Figure 5-2 Pendant Standard (left) and Pendant Lite (right) Located in the Cradle

5.2 Pendant Cradle Mechanical Drawing

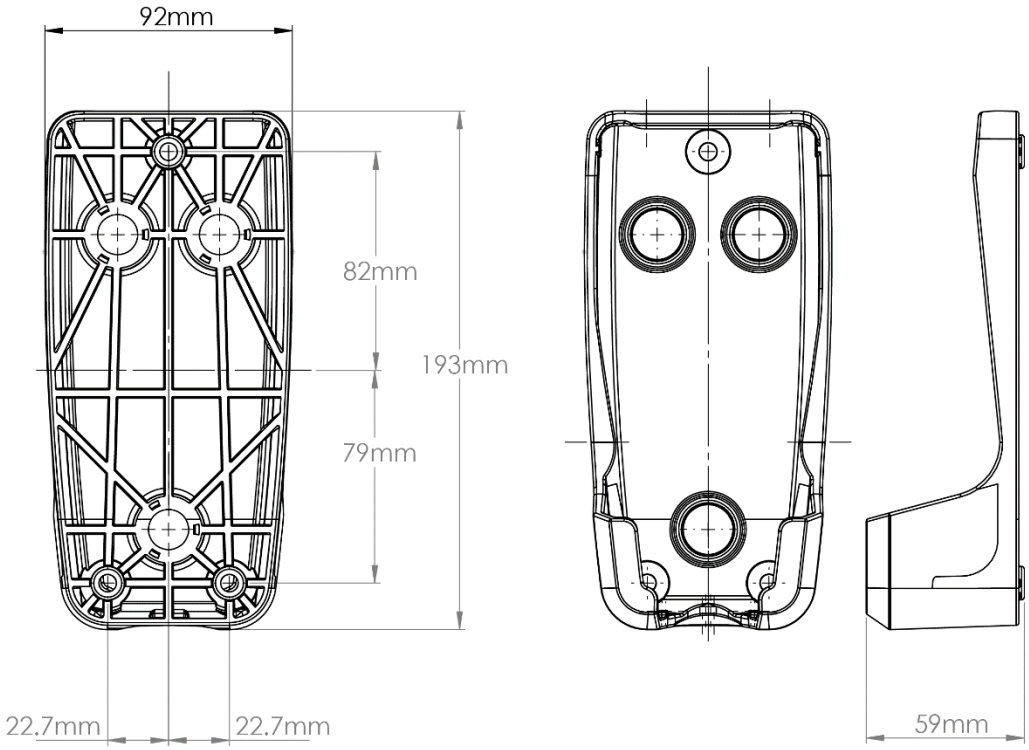

Figure 5-3 Remote Pendant Cradle Dimensions (mm)

5.2.1 Pendant Cradle Mounting Hole Pattern

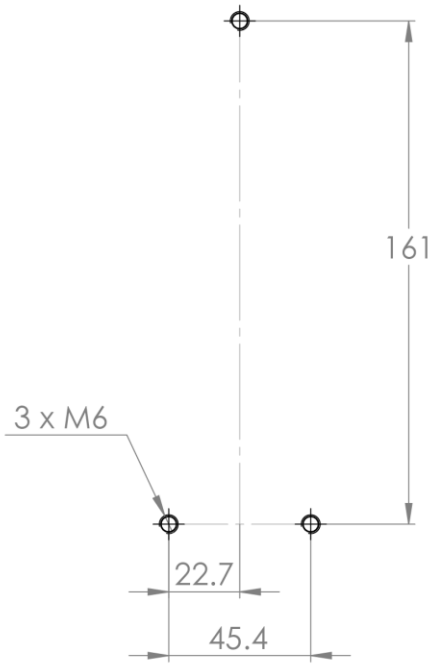

Figure 5-4 Remote Pendant Cradle Mounting Hole Pattern (mm)

6 Mechanical Installation

6.1 Mounting the Remote Pendant

- The Remote Pendant must be installed vertically as shown in *Figure 6-1* or tilted backwards as shown in *Figure 6-2*. It must not be mounted tilted forward.
- Ensure 50mm of free air around the Remote Pendant.
- The Remote Pendant must not be installed in the vicinity of other heat generating equipment which may cause the temperature applied to the Pendant to exceed the product rating.

6.2 Mounting the Pendant Cradle

STEP 1 Drill three M6 holes to suit the mounting hole pattern for the cradle as shown in *Figure 5-4.*

STEP 2 Place the cradle so that the holes line up with the three drilled holes.

STEP 3 Secure the cradle to the equipment by fitting M6 screws into the mounting holes to complete the mounting. Tighten the three mounting screws to 4Nm.

STEP 4 Place the Pendant into the cradle. It will be held securely by three magnets.

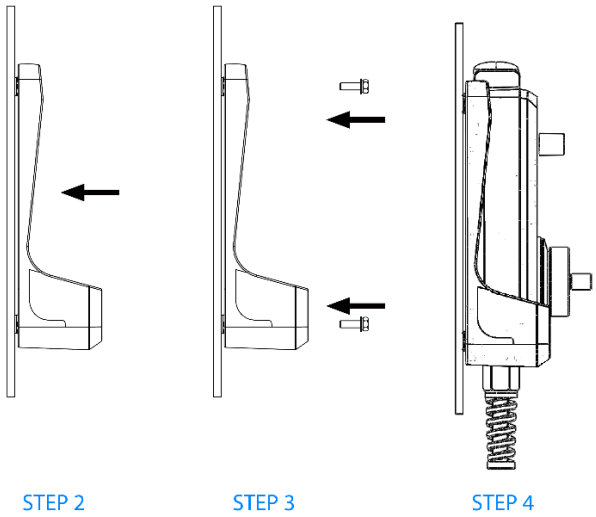

Figure 6-1 Mechanical Mounting of Remote Pendant Cradle

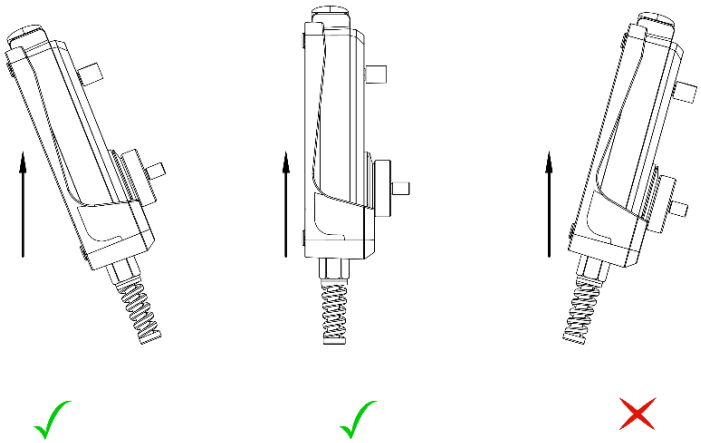

Figure 6-2 Allowable Mounting Angle is vertical or tilted backwards only

6.3 Mounting the Patch Board

6.3.1 Patch Board Mk1 and Mk2 Cut-out Pattern

The Mk1 and Mk2 Patch Boards (panel-mount types) must be mounted through a flat panel with a hole pattern as shown in *Figure 6-3*.

NOTE, this is not applicable to Mk2 Enclosure, DIN-rail mounted model.

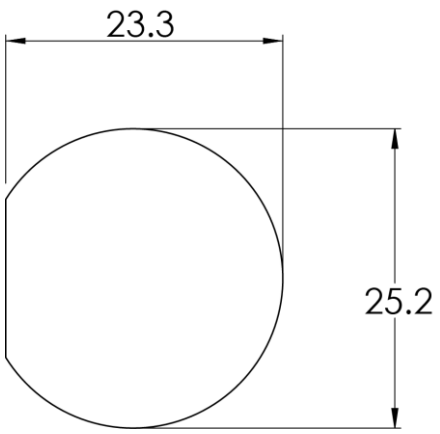

Figure 6-3 Remote Pendant Patch Board Mounting Hole Dimensions (mm)

6.3.2 Patch Board Mk2 Enclosure

Patch Board Mk2 Enclosure is intended for mounting on TS35 DIN rail using the clips on the rear of the enclosure.

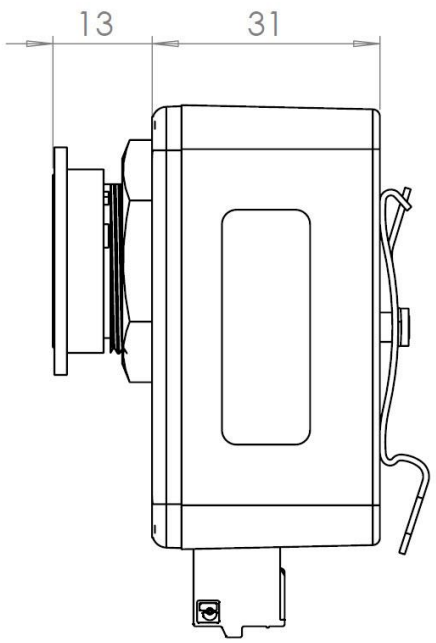

Figure 6-4 Remote Pendant Patch Board Mk2 DIN Rail Mount

6.4 Mounting the Spiral Cable Clamp

A Pendant Cable Clamp is supplied with all Remote Pendant models having a spiral cable. Refer to *Table 6-1* and the Pendant Product Code in *Figure 2-2.*

Part Number	***Cable Type***	***STR-SPIRAL-STR***	***Length Coiled***	***Length Extended***
AMI5-C0xxx-DEB1-x	Spiral	0.5m - 1.5m - 0.5m	1.5m	2.5m
AMI5-C0xxx-DEC1-x	Spiral	0.5m - 2.4m - 0.5m	1.8m	3.4m

Table 6-1 Remote Pendant Models having a Spiral Cable

The purpose of the clamp is to protect the Patch Board connector from high forces generated by the spiral cable. The user must install the clamp near the Patch Board to ensure the clamp takes the full load of the cable force. The clamp must be aligned to the expected directional pull-force (as shown in *Figure 6-5*) so that the cable is pulled along the axis of the clamp gland. This will minimise sharp bending at the clamp gland.

Figure 6-5 Clamp Alignment with Pull Force

The Pendant Cable Clamp includes a polypropylene clamp body and a thermoplastic elastomer insert, as shown in *Figure 6-6*.

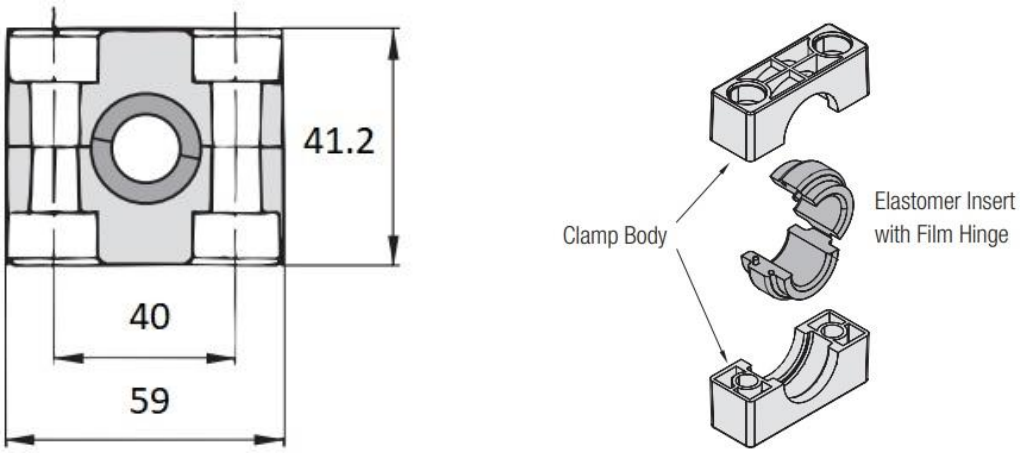

Figure 6-6 Pendant Cable Clamp

User-supplied M5 hex socket head cap screws are recommended for mounting the Pendant Cable Clamp.

7 Electrical Installation

7.1 Introduction

This chapter contains information that is useful in planning the electrical installation for the Remote Pendant:

- Connector Overview
- Connection and wiring diagrams
- Communications wiring

The Remote Pendant should be installed by a person with the necessary skills and qualifications relating to the installation and commissioning of control equipment.

7.2 Connector Overview

7.2.1 Remote Pendant Patch Board Mk1

The Patch Board Mk1 connector designators are shown in *Figure 7-1*.

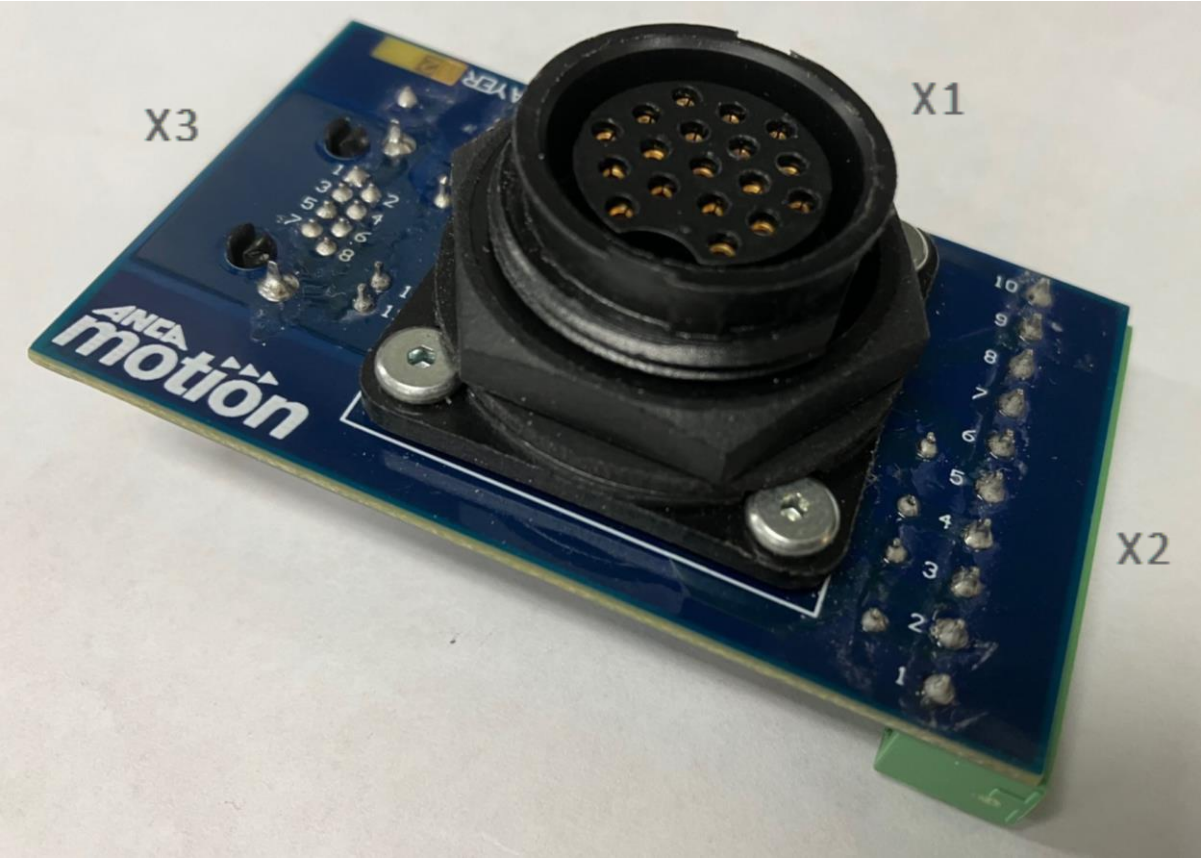

Figure 7-1 Pendant Patch Board Mk1 Connectors

7.2.2 Remote Pendant Patch Board Mk2

The Patch Board Mk2 connector designators are shown in *Figure 7-2*.

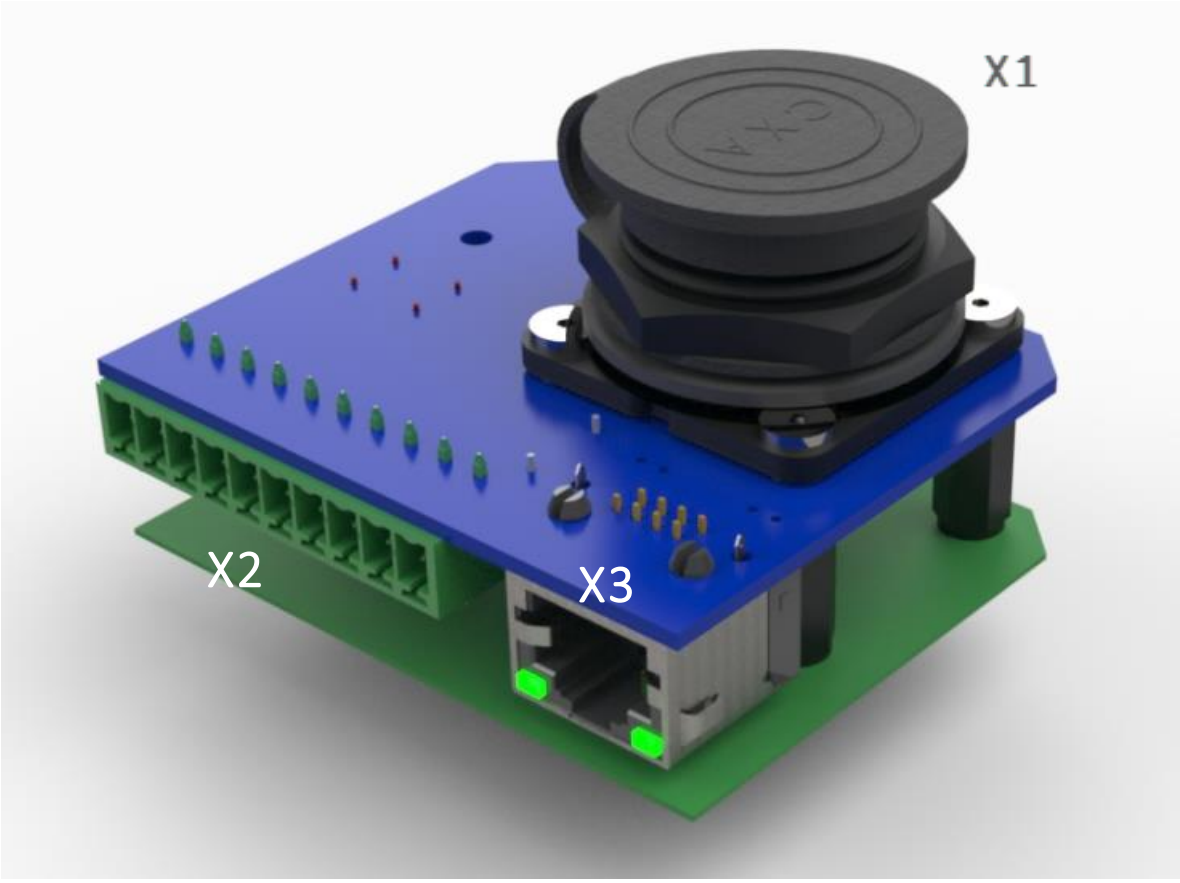

Figure 7-2 Pendant Patch Board Mk2 Connectors

The Mk2 Patch Board is also available in an optional DIN rail mounted enclosure. Note the engraving on the top shows the connector pin numbers for X2, pin 1 on left, to pin 10 on the right.

Figure 7-3 Pendant Patch Board Mk2 Enclosure Connectors

7.3 Connector Descriptions

The connectors for the Mk1 and Mk2 Patch Boards are shown below.

7.3.1 X1 - Pendant Circular Connector

Connector	*Designator*	*Function*	*Mating Connector*
18 Pin Circular Connector	X1	Connects the Pendant to the Patch Board	Supplied with Pendant

Table 7-1 Circular Connector X1

7.3.2 X2 - Power Supply and Safety Interface Connector

Connector	*Designator*	*Function*	*Mating Connector*
10-way plug-in terminal block	X2	Provides power and safety wiring to the Pendant	ICN-3077-1610 Supplied with Patch Board

Table 7-2 Terminal Block X2

Figure 7-4 Connector X2 Pin Assignment on Patch Board Mk1

Figure 7-5 Connector X2 Pin Assignment on Patch Board Mk2

7.3.3 X3 – EtherCAT Connector

Connector	Designator	Function	Mating Connector
RJ45	X3	EtherCAT Cable	8P8C modular connectors

Table 7-3 EtherCAT Connector X3

Connector	Pin Number	Label
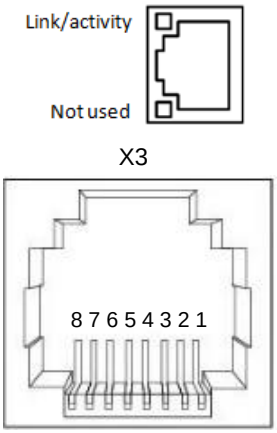	1	TX+
	2	TX-
	3	RX+
	4	N/C
	5	N/C
	6	RX-
	7	N/C
	8	N/C

Table 7-4 EtherCAT Connector Pin Assignment and EtherCAT LED Indicators

The EtherCAT connector provides a green LED for EtherCAT Link/Activity to show the device has been linked or is active (receiving or transmitting data).

7.3.4 EtherCAT Cable

Standard EtherCAT cables are used to connect the Remote Pendant to other EtherCAT devices. The following types of cables must be used with 8P8C modular connectors. They are commonly referred to as “RJ45 shielded patch leads”. Category 5e is the minimum requirement; Cat5 cables are not suitable.

Cable	Name	Cable Shield	Pair Shielding
Cat 5e or above	F/UTP	Foil	None
	SF/UTP	Screen and Foil	None

Table 7-5 EtherCAT Cable

- TP = Twisted pair
- U = Unscreened pairs
- F = Foil
- S = Screened (Braid type)

Either straight or crossover cables may be used. Recommended cables are listed in the accessories section of this manual.

7.4 Wiring Diagram

The Pendant cable is pre-wired with an 18-pin plug to connect to the Patch Board, X1. The user must connect a 24VDC power supply and safety wiring to X2. The EtherCAT cable connects to X3.

Figure 7-6 shows a typical wiring diagram for the Remote Pendant with a Mk1 Patch Board configured for safety PLC Test Pulses (TP1, TP2).

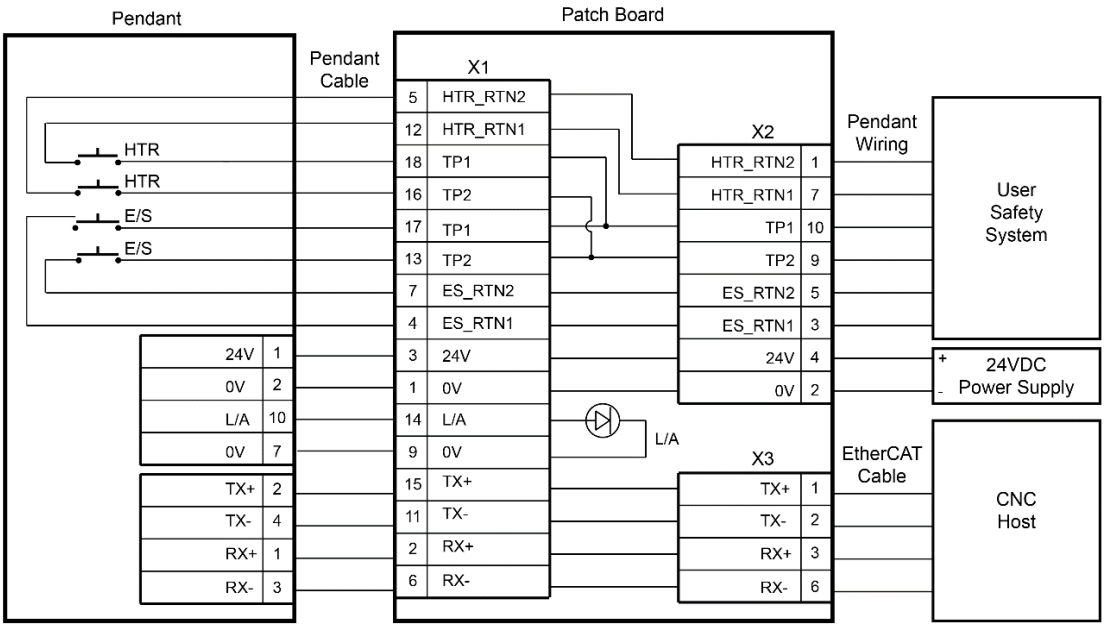

Figure 7-6 Wiring of the Remote Pendant Patch Board Mk1

Figure 7-7 shows the typical wiring diagram for the remote pendant system with a Mk2 Patch Board with the Emergency Stop and Hold-to-Run switches wired to a safety PLC.

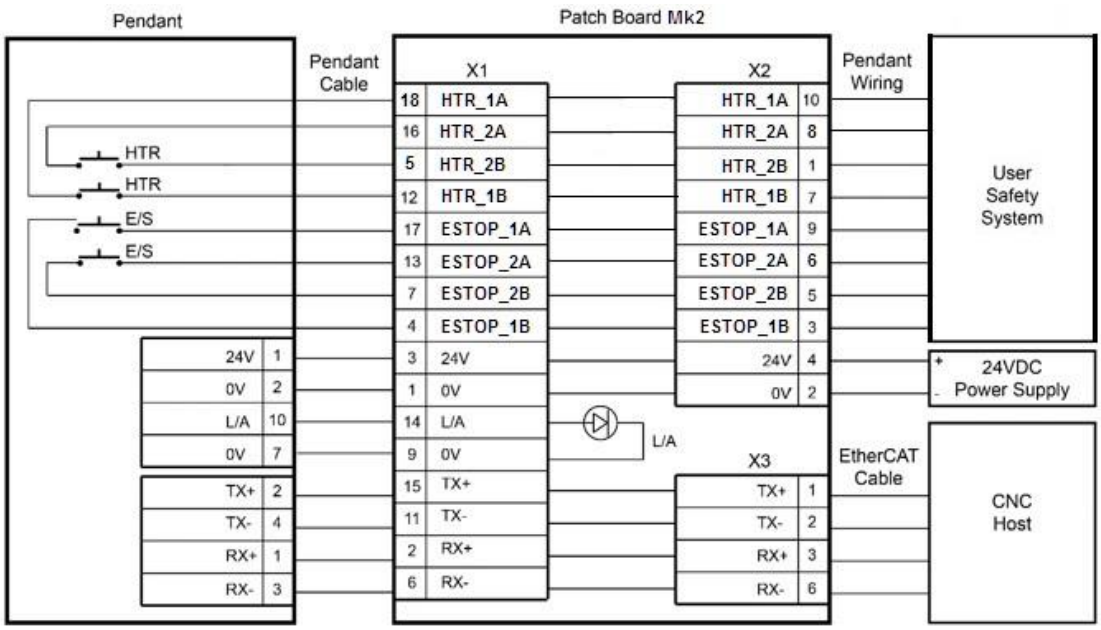

Figure 7-7 Wiring of the Remote Pendant Patch Board Mk2

8 Communication

8.1 EtherCAT®

The Remote Pendant supports communication using the EtherCAT[2] protocol. This protocol provides deterministic communication over a standard 100Mbit/s (100Base-TX) Fast Ethernet (IEEE802.3) connection.

The Remote Pendant functions as an EtherCAT slave device with an INPUT port (RJ45) located on the Patch Board. Note that there is no OUTPUT port (RJ45) and hence, it is intended to be the last EtherCAT slave in the network to minimise ethernet wiring and connections.

The Remote Pendant can operate in an EtherCAT system with a minimum Master update rate of 1ms.

8.2 Third Party EtherCAT Masters

The Remote Pendant has been tested with 3rd party EtherCAT Masters. However, special attention is required when a Master other than ANCA Motion's Master is used.

According to the EtherCAT standard[3], an EtherCAT Master should not check the device Revision Number matches the configured Revision Number unless the ESI-file explicitly requests it. As the Remote Pendant ESI-file does not contain this request, the EtherCAT Master should not raise an error when there is a Revision Number mismatch between the configuration and the connected device.

8.3 ESI File

The Remote Pendant EtherCAT Slave Information (ESI file) can be downloaded from the ANCA Motion website.

https://motion.anca.com/Products/User-Interface/User-Interface/Remote-Pendant

[2] EtherCAT® is a registered trademark and patented technology, licensed by Beckhoff Automation GmbH.
[3] Page 28 in ETG.2000 S (R) V1.0.12

9 Safety Devices

9.1 Safety Devices on the Pendant

The Remote Pendant ***Standard*** contains two safety actuators.

- Emergency Stop (E-Stop) actuator is located at the top of the pendant, and
- Hold-to-Run (HTR) actuator is located on the side of the pendant.

The Remote Pendant ***Lite*** contains only one safety actuator.

- Emergency Stop (E-Stop) actuator is located at the top of the pendant.

The safety actuators are wired from the actuator terminals in the Pendant directly to the Pendant Patch Board via the Pendant cable. The Pendant electronic Printed Circuit Board Assembly (PCBA) does not monitor or have any electrical connections to these safety actuators. The end-user can connect to the E-Stop and HTR actuators at the connector marked X2 on the Patch Board.

9.2 Safety Standards and Risk Assessment

When using the Emergency Stop and Hold-to-Run Switches in a safety related part of a control system, use these actuators properly in accordance with the safety standards and regulations of the machine, system, and application, in the country or region where the Pendant is used. Also, perform a risk assessment prior to using these safety actuators on the Pendant.

Do not disable the safety functions of the Emergency Stop and Hold-to-Run switch by using tape, elastic band, or other method otherwise the loss of the safe function may cause serious accidents.

9.3 Safety Actuator Data

Machinery safety standard ISO 13849 requires the manufacturer of machinery to determine the safety level of the machine. The B10d values for the Emergency-Stop and Hold-to-Run actuators are provided in *Table 9-1.* The entire concept of the control system, in which the safety component is integrated, must be validated to EN ISO 13849-2.

Device	***B10d***
Emergency Stop Actuator	100,000
Hold-to-Run Actuator	2,000,000

Table 9-1 B10D Specifications for the E-Stop and HTR actuators

9.4 Emergency Stop Application Information

The Emergency Stop function is asserted by pushing down the actuator knob. The knob will lock-down to activate the safe function. To release the E-Stop, turn the knob clockwise until it is unlocked.

To ensure a high level of system safety, connect the two contacts of the Emergency Stop actuator to a disagreement detection circuit (safety relay module) per ISO 13849-1 and EN954-1. Two Normally Closed (NC) switch contacts are provided so that if one contact fails open, the other contact will still allow the safety PLC to disable machine operation. The connections are provided from X2 on the Patch Board.

The Emergency Stop actuator electrical specifications are shown in *Table 9-2.* To meet the requirements of a safety master which use test pulses for fault diagnostics (test pulses), the E-Stop actuator is suitable for low current applications. The Emergency Stop actuator conforms to the standards shown in *Table 9-3.*

The Emergency Stop Actuator has a direct opening mechanism (forcibly opened contacts). The mechanism forces open a welded contact by the direct force applied by the actuator (operating section) pressing down.

Parameter	Specification
Voltage	30Vdc (Max)
Current	1A (Max) @30Vdc (Resistive Load)
Low Current Load	5Vdc @1mA (Minimum) 30Vdc @0.15mA (Minimum)

Table 9-2 Emergency Stop Actuator Electrical Specifications

Parameter	Specification
Applicable Standards	IEC 60947-5-1 EN 60947-5-1 IEC 60947-5-5 EN 60947-5-5 UL 508 CSA 22.2 No.14 GB14048.5

Table 9-3 Emergency Stop Approval Standards

9.5 Hold-to-Run Application Information

The Hold-to-Run (HTR) actuator is a 3-position enabling switch designed for OFF-ON-OFF operation. It can used to enable the machine operation in a hazardous area only when pressed in 3mm to the middle detent position. Safe systems must be designed to enable machine operation only when the enabling switch is the middle position. The switch does not turn ON while returning from the fully pressed OFF position to the fully released OFF position.

Dual contacts are provided in the HTR switch. If one contact fails, the other contact will still allow the safety PLC to disable machine operation. To ensure a high level of system safety, connect the two contacts of the Hold-to-Run actuator to a disagreement detection circuit (e.g. safety relay module) according to ISO 13849-1/EN954-1.

The two contacts are designed to operate independently and pressing the edge of the Hold-to-Run actuator will operate one contact earlier than the other contact, causing a delay in operation. To avoid this, always press the centre of the button.

The Hold-to-Run actuator electrical specifications and duty cycle are shown in *Table 9-4*. The Hold-to-Run Actuator conforms to the applicable standards shown in *Table 9-5*.

Parameter	Specification
Contact Rating	1A @30V (Max) Resistive Load 0.7A @30V (Max) Inductive Load
Operating Duty Cycle	1200 Cycles per Hour (Max)

Table 9-4 Hold-to-Run Switch Electrical Specifications

Parameter	Specification
Applicable Standards	IEC 60947-5-1 EN 60947-5-1 IEC 60947-5-8 EN 60947-5-8 GS-ET-22 (TUV approved) UL508 CSA C22.2 No. 14 GB14048.5

Table 9-5 Hold-to-Run Switch Applicable Standards

10 Installation Checklist

10.1 Introduction

This chapter contains a power-up checklist aimed at ensuring safe and successful initial power up of the pendant.

10.2 Checklist

- ❒ The installation location satisfies the requirements in Chapter *6 Mechanical Installation.*
- ❒ The supply voltage is within the operating limits of operation of the Remote Pendant.
- ❒ The wiring is connected to the proper terminals and the conductors are secured.
- ❒ The proper power supply fuses have been installed.
- ❒ All wiring conforms to applicable regulations and standards
- ❒ No physical damage is present to any component within the system
- ❒ All equipment connected to the Remote Pendant is ready for start-up
- ❒ A risk assessment has been completed on the entire machine and is considered by the user to be safe enough for operation.

11 EtherCAT Configuration

11.1 Introduction

This chapter contains configuration data for the Remote Pendant. It also includes information on the Frame Packet Mapping.

11.2 Frame Packet Mapping

11.2.1 Inputs

The input frame mapping from the Remote Pendant to the EtherCAT master is described in *Table 11-1*.

Input Types	***Activated***	***Not Activated***	***Description***	***Unit***	***Size***
Tactile Switches	Press -1 (logic)	Release -0 (logic)	SW1 – SW16	N/A	16 bits
Temperature	N/A	N/A	Internal temperature	C°	8 bits
Analog (Pot)	N/A	N/A	Feedrate control	N/A	8 bits
MPG	N/A	N/A	Quadrature encoder	N/A	32 bits

Table 11-1 Input Frame Mapping from Slave to Master

The input frame from the Remote Pendant to the EtherCAT master is detailed in *Table 11-2*.

Frame Number	0	1	2	3	4	5	6	7
Size	16 bits		8 bits	8 bits	32 bits			
IP #	IPB 1 - 8	IPB 9 - 16	IPI1	IPI2	IPI3			
Function	Tactile Switches		Temp	Analogue (Pot)	MPG (lowest byte)	MPG (2nd low byte)	MPG (2nd high byte)	MPG (highest byte)
	SW1-SW8	SW9-SW16						

Table 11-2 Input Frame from Slave to Master

11.2.2 Boolean Inputs

The boolean inputs from the Remote Pendant microcontroller to the EtherCAT master are described in *Table 11-3*.

IP #	*Tactile Switch #*	*Remote Pendant Button Label*	*Frame Packet Boolean Input*
IPB1	SW1	USER	Boolean Base + 1
IPB2	SW2	ACK	Boolean Base + 2
IPB3	SW3	LIVE OFFSET	Boolean Base + 3
IPB4	SW4	HOME	Boolean Base + 4
IPB5	SW5	x1	Boolean Base + 5
IPB6	SW6	x10	Boolean Base + 6
IPB7	SW7	x100	Boolean Base + 7
IPB8	SW8	MPG FEED	Boolean Base + 8
IPB9	SW9	X	Boolean Base + 9
IPB10	SW10	Y	Boolean Base + 10
IPB11	SW11	Z	Boolean Base + 11
IPB12	SW12	+ (Plus)	Boolean Base + 12
IPB13	SW13	A	Boolean Base + 13
IPB14	SW14	C	Boolean Base + 14
IPB15	SW15	P	Boolean Base + 15
IPB16	SW16	- (minus)	Boolean Base + 16

Table 11-3 Boolean inputs from slave to master

Example:

If the base for a Remote Pendant is 700, COLLET Button Press = IPB701. Note the Button Label text provided in this manual is one example and other options are available.

11.2.3 Integer Inputs

The integer inputs from the Remote Pendant microcontroller to the EtherCAT master are described in *Table 11-4.*

IP #	*Function*	*Frame Packet Integer Input*
IPI1	Temperature	Integer Base + 1
IPI2	Feedrate (Pot)	Integer Base + 2
IPI3	MPG	Integer Base + 3

Table 11-4 Integer inputs from slave to master

Example:

If the base for a Remote Pendant is 700, Feedrate Pot = IPI702

11.2.4 Outputs

The output frame mapping from the EtherCAT master to the Remote Pendant is described in *Table 11-5*.

Output Types	*Activated*	*Not Activated*	*Description*
LEDs	LIGHT ON-1 (logic)	LIGHT OFF-0 (logic)	Activate/Deactivate LED
Buzzer	BUZZER ON-1 (logic)	BUZZER OFF-0 (logic)	Activate/Deactivate buzzer

Table 11-5 Output frame mapping from master to slave

The output frame from the EtherCAT master to the Remote Pendant is shown in *Table 11-6*.

Frame Number	0	1	2
Size	8 bits	8 bits	8 bits
OP #	OPB 1 - 8	OPB 9 - 16	OPB17-OPB24
Function	LEDs	Buzzer, LEDs	

Table 11-6 Output frame from master to slave

11.2.5 Boolean Outputs

The boolean outputs from the EtherCAT master to the Remote Pendant are described in *Table 11-7*.

OP #	*Front Panel Label*	*Frame Packet Boolean Output*
OPB1	USER LED	Boolean Base + 1
OPB2	ACK LED	Boolean Base + 2
OPB3	LIVE OFFSET LED	Boolean Base + 3
OPB4	HOME LED	Boolean Base + 4
OPB5	x1 LED	Boolean Base + 5
OPB6	x10 LED	Boolean Base + 6
OPB7	x100 LED	Boolean Base + 7
OPB8	MPG FEED LED	Boolean Base + 8
OPB9	X LED	Boolean Base + 9
OPB10	Y LED	Boolean Base + 10
OPB11	Z LED	Boolean Base + 11
OPB12	+ (Plus) LED	Boolean Base + 12
OPB13	A LED	Boolean Base + 13
OPB14	C LED	Boolean Base + 14
OPB15	P LED	Boolean Base + 15
OPB16	- (minus) LED	Boolean Base + 16
OPB17	Buzzer	Boolean Base + 17
OPB18	All LEDs	Boolean Base + 18
OPB19	Reserved	Boolean Base + 19
OPB20	Reserved	Boolean Base + 20
OPB21	Reserved	Boolean Base + 21
OPB22	Reserved	Boolean Base + 22
OPB23	Reserved	Boolean Base + 23
OPB24	Reserved	Boolean Base + 24

Table 11-7 Boolean outputs from master to slave

12 Commissioning and Testing

12.1 Introduction

The software tools provided within ANCA Motion AMCORE enable commissioning and diagnostics of the EtherCAT Remote Pendant. An XML file is provided to the end user, or it can be download from the ANCA Motion web site: https://motion.anca.com/Products/User-Interface/User-Interface/Remote-Pendant

12.2 Testing / Power-On Checks

The following procedure must be adhered too during start-up to ensure safe operation and functionality:

1. Ensure all wiring is secure and there are no short circuits at the user-installed connectors.
2. Plug in all connectors.
3. All equipment connected to the Remote Pendant is ready for start-up.
4. Start-up of the Remote Pendant will not result in any hazards in the current machine state of loading and accessibility.
5. Ambient temperature is within the product limits.
6. A machine risk assessment has been performed and the machine has been assessed as safe to use.
7. Ensure the 24V input is within the specification limits for the product.

12.3 EtherCAT Fault Diagnostics

The state and blink rate of the LED indicators on the Remote Pendant and Patch Board can be used to trouble-shoot communication errors.

12.3.1 Remote Pendant Status Indicators

Two LED indicators on the front panel show the operating status and error status of the Remote Pendant. The status indicators are marked RUN (green) and Error (red), as shown in *Figure 12-1.*

Figure 12-1 EtherCAT status indicators

The state of the RUN and ERROR indicators are described in *Table 12-1* and *Table 12-2* respectively.

The indicator blink rates are described in *Table 12-3.*

In normal operation, the green RUN indicator is ON, and the red ERROR indicator is OFF.

12.3.2 EtherCAT RUN Indicator

State of LED	Description
On	The Remote Pendant is operational
Flickering	The Remote Pendant is booting or downloading firmware
Blinking	The Remote Pendant in the pre-op state
Single Flash	The Remote Pendant is in a safe-operational state
Off	The Remote Pendant is off or in an initialisation state

Table 12-1 EtherCAT RUN LED Indicator States

12.3.3 EtherCAT ERROR Indicator

State of LED	Description
On	A critical communication or application error has occurred
Flickering	A booting error had been detected
Blinking	A general configuration error has occurred
Single Flash	A local error has occurred
Off	No error

Table 12-2 EtherCAT ERROR LED Indicator States

12.3.4 EtherCAT RUN and ERROR Indicator Blink Rates

State of LED	Frequency
On	Constantly On
Flickering	10Hz, On for 50ms and off for 50ms
Blinking	2.5Hz, On for 200ms and off for 200ms
Single Flash	On for 200ms and off for 1000ms
Off	Constantly Off

Table 12-3 EtherCAT Indicator Blink Rates for RUN and ERROR

12.3.5 Patch Board LED Indicators

The EtherCAT connector on the Pendant Patch Board provides a green Link/Activity (L/A) indicator, as required by the EtherCAT standard. The Link/Activity indicator shows the Pendant is linked to an EtherCAT master device and is transmitting or receiving data, as described in *Table 12-4*.

During normal operation the state of the EtherCAT Link/Activity indicator is flickering.

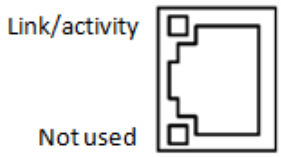

State of LED	Activity	Link
On	No	Yes
Flickering	Yes	Yes
Single Flash	No	No
Off	No	No

Table 12-4 EtherCAT Link/Activity LED Indicator Blink Rates

13 Standards and Conformity

13.1 CE and FCC Conformity

Marking, Applicable Regulations & Applicable Region	***Standards***	***Test House***
CE EMC 2014/30/EU (Electromagnetic Compatibility Directive) RoHS2 2015/863/EU (Restriction of Hazardous Substances) European Union United Kingdom	EN 61000-6-2:2005 Electromagnetic compatibility (EMC) - Part 6-2: Generic standards - Immunity standard for industrial environments EN 61000-6-4:2007 Electromagnetic compatibility (EMC) - Part 6-4: Generic standards - Emission standard for industrial environments	Precision Machinery Research & Development Centre. Intelligent Electromechanical Testing Laboratory. No.27, 37th Road Taichung Industrial Park, Taichung, Taiwan, R.O.C.
FCC United States of America	47 CFR FCC Part 15, Subpart B (Class A)	

Table 13-1 Applicable Standards

13.2 FCC Notices

This device complies with part 15 of the FCC Rules. Operation is subject to the following two conditions: (1) This device may not cause harmful interference, and (2) this device must accept any interference received, including interference that may cause undesired operation.

Changes or modifications not expressly approved by ANCA Motion could void the user's authority to operate the equipment.

This equipment has been tested and found to comply with the limits for a Class A digital device, pursuant to part 15 of the FCC Rules. These limits are designed to provide reasonable protection against harmful interference when the equipment is operated in a commercial environment. This equipment generates, uses, and can radiate radio frequency energy and, if not installed and used in accordance with the instruction manual, may cause harmful interference to radio communications. Operation of this equipment in a residential area is likely to cause harmful interference in which case the user will be required to correct the interference at his own expense.

13.3 EtherCAT® Conformance Marking

An EtherCAT[4] conformance mark appears on the Remote Pendant product label to certify the product meets the conformance and interoperability requirements of the EtherCAT Technology Group (ETG) Conformance Guide ETG.7010.

13.4 Limitations for Use

The AMI5000 Pendant has been designed and tested for use in industrial environments only and must not be used in residential areas.

[4] EtherCAT® is a registered trademark and patented technology, licensed by Beckhoff Automation GmbH, Germany

14 Specifications

14.1 Control Functions

Attribute	*Qualification*
14.1.1 User Interface	
Switches with LED indicators	16
Feedrate Potentiometer	Yes
MPG	Yes
Emergency stop	Yes
Hold-to-Run	Optional
14.1.2 Feedrate Potentiometer	
Mechanical Travel	300° +/-5°
14.1.3 MPG	
Pulse Per Rotation (PPR)	100
14.1.4 Buzzer (Optional)	
Frequency	2.9 kHz (Nominal)

14.2 Safety Actuators

Attribute	*Qualification*
14.2.1 Emergency Stop	
Specifications	Chapter *9.4*
14.2.2 Hold-to-Run (Optional)	
Specifications	Chapter *9.5*

14.3 Environmental Specifications

Attribute	*Qualification*
14.3.1 Storage	
Ambient Temperature	-20 to +55° C
Relative Humidity	5 to 95%
14.3.2 Operation	
Operating temperature range at rated continuous current	0 to +50° C
Relative Humidity	5 to 85% non-condensing
Mechanical vibration	Within class 3M1 (IEC 60721-3-3)
Ingress Protection Rating	IP53

14.4 EtherCAT Interface

Attribute	*Qualification*
Protocol	EtherCAT
Baud Rate	100 Mb/s
Connector	Ethernet RJ-45 (on Patch Board)
EtherCAT Master Cycle Time	1 ms

14.5 Electrical Specifications

Attribute	*Qualification*
14.5.1 Power Supply	
Input Voltage Range	20.4 to 28.8 VDC (nominal 24 VDC)
Input current (max.)	100 mA
14.5.2 Power Supply Protection	
Input Transient Protection	Yes
Reverse Polarity Protection	Yes

14.6 Mechanical Specifications

Attribute	*Qualification*
14.6.1 Physical Characteristics	
Mounting position	Vertical
Device Weight	1 kg
14.6.2 Pendant Standard Dimensions	
Pendant Standard, including cradle (Height x Width x Depth)	276 x 99 x 89 mm
Pendant Standard, excluding cradle (Height x Width x Depth)	276 x 93 x 82 mm
14.6.3 Pendant Lite Dimensions	
Pendant Lite, including cradle (Height x Width x Depth)	276 x 92 x 89 mm
Pendant Lite, excluding cradle (Height x Width x Depth)	276 x 81 x 82 mm
14.6.4 Cable Characteristics Standard cable lengths are listed in *Figure 2-2*.	
Type	Straight or spiral (optional)
Length (min)	2 m
Length (max)	10 m
Diameter	9.5 mm
14.6.5 Patch Board Connectors	
EtherCAT Connector	RJ45
Input/Output Connector	10 position, 3.81 mm pitch, Phoenix

15 Accessories

15.1 Introduction

This chapter contains a summary of the options available for the EtherCAT Remote Pendant, including product part numbers.

Please contact ANCA Motion Sales regarding custom accessories. See section *16.2* for contact information.

15.2 Pendant Cradle

Figure 15-1 Cradle Assembly

Part Number	*Description*
646-0-01-8367	Cradle Assembly

Table 15-1 Cradle Assembly Order Code

15.3 Pendant Patch Board Mk1

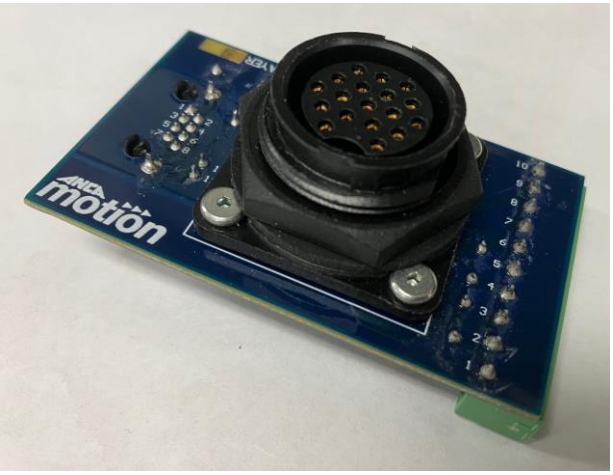

Figure 15-2 Patch Board Mk1

Part Number	*Description*
646-0-00-8366	Patch Board Mk1 Panel-mount Assembly (includes 10-way plug-in terminal block)

Table 15-2 Patch Board Mk1 Order Code

Refer to section *6.3.1* for panel-mounting instructions.

15.4 Pendant Patch Board Mk2

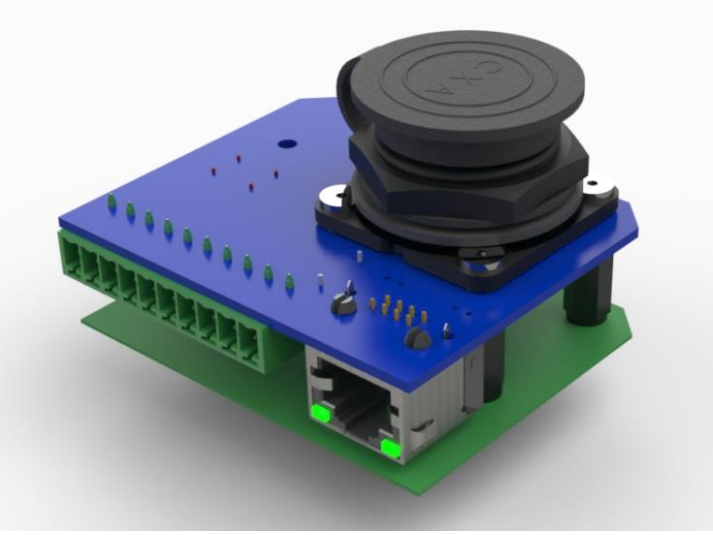

Figure 15-3 Patch Board Mk2

Part Number	Description
619-0-00-2321	Patch Board Mk2 Panel-mount Assembly (includes 10-way plug-in terminal block)

Table 15-3 Patch Board Mk2 Order Code

Refer to section *6.3.1* for panel-mounting instructions.

15.5 Pendant Patch Board Mk2 Enclosure

Figure 15-4 Patch Board Mk2 Enclosure

Part Number	Description
619-0-00-2203	Patch Board Mk2 in a DIN-mount enclosure (includes 10-way plug-in terminal block)

Table 15-4 Patch Board Mk2 Enclosure Order Code

Refer to section *6.3.2* for DIN-rail mounting instructions.

15.6 Patch Board Terminal Block

A 10-way plug-in terminal block is supplied with all Patch Board models Mk1, Mk2 and Mk2 Enclosure.

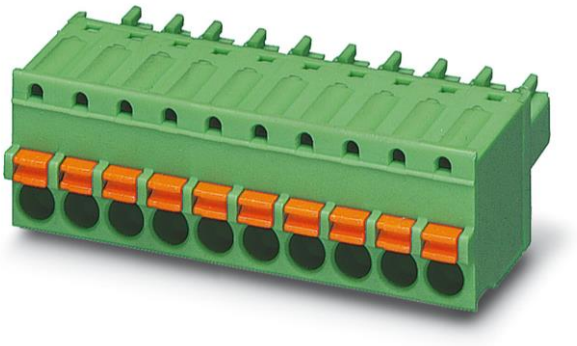

Figure 15-5 Patch Board Terminal Block

A replacement terminal block is available; refer to *Table 15-5*.

Part Number	*Description*
ICN-3077-1610	10-way plug-in terminal block

Table 15-5 Patch Board Terminal Block Order Code

15.7 EtherCAT Cables

Figure 15-6 EtherCAT Cable Cat 5e

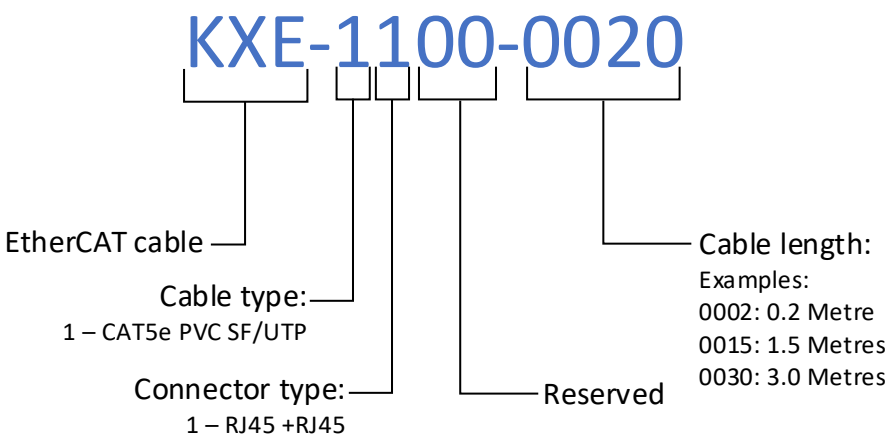

Figure 15-7 Product Order Code

Catalogue Number	*Description*
KXE-1100-0002	EtherCAT Cable, Cat 5e, SF/UTP, 0.2m
KXE-1100-0015	EtherCAT Cable, Cat 5e, SF/UTP, 1.5m
KXE-1100-0030	EtherCATCable, Cat 5e, SF/UTP, 3.0m

Table 15-6 EtherCAT Cable Order Codes

15.8 Pendant Spiral Cable Clamp

A Spiral Cable Clamp is supplied with all Remote Pendant models having a spiral cable.

A replacement Cable Clamp is available; refer to *Table 15-7* for ordering information.

Part Number	*Description*
ICN-3159-0057	Cable Clamp, 8mm

Table 15-7 Pendant Cable Clamp Order Code

Refer to section *6.4* for mounting instructions.

15.9 Accessory Kits

The Remote Pendant is available stand-alone, or in kit form together with a Cradle and Patch Board.

The last digit in the Pendant Catalogue Number specifies the kit type, as described in *Table 15-8*.

Kit Order Code	*Kit Contents*	
	Quantity	*Item Description*
AMI5-C0xxx-DExx-1	1	Remote Pendant
	1	Pendant Cradle, plastic
	1	Patch Board Mk1, panel-mount
AMI5-C0xxx-DExx-2	1	Remote Pendant
	2	Pendant Cradle, plastic
	1	Patch Board Mk1, panel-mount
AMI5-C0xxx-DExx-3	1	Remote Pendant
	1	Pendant Cradle, plastic
	1	Patch Board Mk2, panel-mount
AMI5-C0xxx-DExx-4	1	Remote Pendant
	1	Pendant Cradle, plastic
	1	Patch Board Mk2 with enclosure, DIN-mount

Table 15-8 Remote Pendant Kit Contents

Refer to section *2.4* for details of the Product Order Code.

16 Additional Information

16.1 Maintenance and Repairs

There are no user serviceable parts inside the Remote Pendant. If the polyester is soiled, it can be wiped with a moist cloth and detergent. Do not use abrasive cleaners. For any repairs please contact your nearest ANCA Motion office or Authorized Service Agent. Refer to section *16.2* for contact information.

16.2 Product, Sales and Service Enquiries

If you require assistance for installation, training or other customer support issues, please contact the closest ANCA Motion Customer Service Office in your area.

ANCA Motion Pty. Ltd.
1 Bessemer Road
Bayswater North
Victoria 3153
AUSTRALIA
Telephone: +613 9751 8900
Web: www.ancamotion.com/Contact-Us
Email: sales@ancamotion.com

ANCA Motion Taiwan
4F, No. 63, Jingke Central Road
Nantun District
Taichung City 40852
TAIWAN
Telephone: +886 4 2359 0082
Web: www.ancamotion.com/Contact-Us
Email: sales.tw@ancamotion.com

16.3 Feedback

This user manual is based on information available at the time of publication. Reasonable precautions have been taken in the preparation of this user manual, but the information contained herein does not purport to cover all details or variations in hardware and software configuration. Features may be described herein which are not present in all hardware and software systems. We would like to hear your feedback via our website: www.ancamotion.com/Contact-Us